DiamaPro®
SYSTEMS

OWNER'S MANUAL

DX22-E

CONCRETE FLOOR GRINDER

USER & MAINTENANCE BOOK

SAVE THESE INSTRUCTIONS FOR FUTURE REFERENCE

WARRANTY REGISTRATION CARD

Form must be completed and submitted within 30 days from the date of purchase.

Customer Information

First and Last Name

Company Name

Address | City | State | Zip Code

Phone Number | Email

Machine Information

Machine Type | Machine Model

Serial # | Purchase Date (dd/mm/yy)

DiamaPro Systems®
3343 Peachtree Road NE
Suite 145 #24
Atlanta, GA 30326

470-977-2323 ■ www.diamaprosystems.com ■ info@diamaprosystems.com

INTRODUCTION

Thank you for purchasing a DIAMAPRO SYSTEMS® product. This manual provides information and procedures to safely operate and maintain the DiamaPro DX22-E. For your own safety and protection from injury, carefully read, understand, and observe the safety instructions described in this manual. Keep this manual or a copy of it with the machine. If you lose this manual or need an additional copy, please contact DiamaPro Systems®.
This machine is designed and built with user safety in mind; however, it can present hazards if improperly operated and serviced.
Please follow the operating instructions carefully. If there are any questions regarding operating or servicing of this machine, please contact DiamaPro Systems®.

Disclaimer: DiamaPro Systems® and its affiliates take no responsibility for any damage, injury or death resulting from the incorrect or unsafe use of this product. Use of this product should be undertaken by competent persons only. It is the operator's responsibility to ensure that the following safety procedures are followed. If you are unsure, do not operate this product.

1. SAFETY INSTRUCTIONS

1.1 KNOW THE RULES & YOUR EQUIPMENT

Most job sites have rules governing equipment use & maintenance. Before starting at a new work location, check with the supervisor or safety coordinator. Ask about any rules or regulations you need to abide by.
OSHA enforces federal laws within the United States that apply to the safe operation, application, & maintenance of equipment on job sites. It is the employer's responsibility to comply with these laws.
Do not operate this machine unless you carefully read the operations and maintenance manual.

1.2 RECEIVE PROPER TRAINING

Do not operate this machine unless you have received operational and maintenance training from a DiamaPro Systems® representative or from an authorized distributor for DiamaPro Systems®

1.3 PROTECT YOUR FEET

Observe all applicable local, state and federal safety regulations. Wear OSHA approved foot protection.

1.4 PROTECT YOUR EYES

Observe all applicable local, state and federal safety regulations. Wear OSHA approved safety glasses.

1.5 PROTECT YOUR LUNGS

Breathable silica may be generated by use of this product. Silica can cause severe and permanent lung damage, cancer, and other serious diseases. Do not breath the dust. Do not rely on your sight or smell to determine if dust is in the air. Silica may be in the air without a visible dust cloud. If air monitoring equipment for silica is not provided by your employer at your work site, you MUST wear appropriate respiratory protection when using or servicing the machine. Consult your employer and OSHA regarding the appropriate respiratory protection.

1.6 PROTECT YOUR EARS

Observe all applicable local, state and federal safety regulations. Wear OSHA approved hearing protection.

1.7 DRESS PROPERLY

Do not wear loose clothing or jewelry that can be caught in moving parts. Wear protective hair covering to contain long hair. Keep hair away from motor air vent. Rubber gloves and non-skid footwear are recommended when working outdoors.

1.8 AVOID A DANGEROUS ENVIRONMENT

Do not expose machine to rain. Do not use machine in wet conditions. Keep work area well lit. When working at an elevated location, pay attention to articles and persons below.

1.9 BEWARE OF HIDDEN DANGERS IN CONCRETE

Rebar or utility lines may be buried in concrete. Disconnect the power to any utility lines. If these dangers are present are to be missed, clearly mark the area.

1.10 KEEP WORK AREA CLEAN - DO NOT RUN OVER ANYTHING

Loose debris could be thrown from crack. Make sure area to be cut is clear from people and any loose objects, nuts, bolts, etc. Never run over any loose objects.

1.11 KEEP CHILDREN AND VISITORS AWAY

Do not allow anyone to stand in line with the grinding path. Do not let children or visitors in contact with machine or extension cord. Keep children and visitors away from the work area.

1.12 AVOID FLAMMABLE LIQUIDS OR GASES

Diamond Tooling produce heat and sparks during operation. Never use machines in dangerous sites containing flammable, combustible or explosive materials such as lacquer, paint, benzene, thinner, gasoline, gases, and adhesive agents.

1.13 AVOID CONTACT WITH HOT TOOLING AND SHROUD

The Diamond tooling and shroud become hot during operation and remain hot after stopped. Do not touch the tooling and shroud without proper hand protection.

1.14 KEEP FIRM GRIP ON MACHINE

Keep a firm hold on the handle grips and maintain control of the machine until the grinding completely stops.

1.15 CHECK TOOLING FOR CRACKS, DAMAGE, AND MISALIGNMENT

Never use a cracked, damaged, or misaligned tooling. After mounting check to see tooling is secure.

1.16 DO NOT FORCE WRONG SIZE OR TYPE OF TOOLING ONTO MACHINE

Running the wrong type/size of tooling can cause damage to your machine

1.17 USE EQUIPMENT AND ACCESSORIES PROPERLY

Do not force a small grinder to do the job of a heavy-duty grinder. Do not use the walk-behind grinder for improper applications. Never cut material for which the tooling was not designed.

1.18 STORE IDLE EQUIPMENT

The machine and tools should be stored in a dry and secure location when not in use. Keep equipment out of reach of children.

1.19 DO NOT FORCE

The grinder will do the job better and safer at the rate for which it was designed.

1.20 OBTAIN MATERIAL SAFETY DATA SHEET (MSDS) FOR ALL WORK SURFACE MATERIALS

This includes primers, all coatings, adhesives, tile and crack filling materials, etc. Do not attempt to cut, clean out or remove material without MSDS information. Consult MSDS sheet for hazards information. Be aware that some materials are explosive such as dust.

1.21 DO NOT OVERREACH

Always keep proper footing and balance.

1.22 MAINTAIN MACHINE WITH CARE

Keep machine clean and follow maintenance procedures for better and safer performance. Keep handles dry, clean, and free from oil and grease. Follow instructions for lubricating and changing accessories.

1.23 REMOVE ADJUSTING TOOLS

Form a habit of checking to see that tools such as adjusting wrenches are removed from the machine and properly stored before starting.

1.24 STAY ALERT

Watch what you are doing. Use common sense. Do not operate machine when you are tired or fatigued.

1.25 DO NOT USE DRUGS, ALCOHOL, MEDICATION

Do not operate machine while under the influence of drugs, alcohol, or any medication.

1.26 KEEP ALL PARTS IN CORRECT POSITION

Do not operate machine with missing or improperly mounted parts.

1.27 CHECK DAMAGED PARTS

Verify all machine guards are in good condition and will function properly before using the machine. Check for alignment of moving parts, binding of moving parts, breakage of parts, mounting, and any other conditions that may affect machine operation. A guard, power switch or other part that is damaged should be properly repaired or replaced by an authorized service center.

1.28 NEVER TOUCH MOVING PARTS

Never touch moving parts such as blades, belts, and others.

1.29 STOP OPERATION IMMEDIATELY IF ANY ABNORMALITY IS DETECTED

Stop using machine immediately if any abnormalities are observed during operation. Examples of abnormalities include unusual noise and vibration

1.30 WHEN REPLACING A PART, USE THE SAME TYPE AND QUALITY

When replacing a component part with a new one, use only the same type and quality of the previous part. Never attempt to repair a machine if you are unfamiliar with proper procedures and techniques required.

1.31 SAVE THESE INSTRUCTIONS

Refer to this operations and maintenance manual as well as any additional instructions included from other manufacturers.

DUST WARNING

Cutting, especially when DRY cutting, generates dust that comes from the material being cut, which frequently contains silica.
When dry cutting, be sure to use a HEPA filtered dust collector.
Silica is a basic component of sand, quartz, brick clay, granite and numerous other minerals and rocks. Exposure to excessive amount of such dust can cause:

- Respiratory diseases (affecting your ability to breath), including chronic bronchitis, silicosis and pulmonary fibrosis from exposure to silica. These diseases may be fatal;
- Skin irritation and rash; and
- Cancer according to NTP* and IARC*
  *National Toxicology Program, International Agency for Research on Cancer

Take precautionary steps

- Avoid inhalation of and skin contact with dust, mist and fumes;
- Wet cut when feasible, to minimize dust;
- Wear and ensure that all bystanders wear appropriate respiratory protection such as dust masks designed to filter out microscopic particles. (See OSHA 29 CFR Part 1910.1200)

CALIFORNIA PROP 65 WARNING

Use of this product can cause exposure to materials known to the State of California to cause
cancer and/or birth defects or other reproductive harm.

CAUTION

Respirable crystalline silica. May cause cancer.
Causes damage to lungs.
Wear respiratory protection during exposure.
Use appropriate dust control equipment to keep dust within OSHA and local regulation limits.

CALIFORNIA PROP 65 WARNING

Thank you for purchasing a DIAMAPRO SYSTEMS® product. This manual provides information and procedures to safely operate and maintain the DiamaPro DX22-E. For your own safety and protection from injury, carefully read, understand, and observe the safety instructions described in this manual. Keep this manual or a copy of it with the machine. If you lose this manual or need an additional copy, please contact DiamaPro Systems®.
This machine is designed and built with user safety in mind; however, it can present hazards if improperly operated and serviced.
Please follow the operating instructions carefully. If there are any questions regarding operating or servicing of this machine, please contact DiamaPro Systems®.

WARNING	THIS PRODUCT CONTAINS LEAD, A CHEMICAL KNOWN TO THE STATE OF CALIFORNIA TO CAUSE BIRTH DEFECTS OR OTHER REPRODUCTIVE HARM.
WARNING	THIS PRODUCT CONTAINS ONE OR MORE CHEMICALS KNOWN TO THE STATE OF CALIFORNIA TO CAUSE CANCER, BIRTH DEFECTS OR OTHER REPRODUCTIVE HARM.
WARNING	EXHAUST GASES FROM THIS PRODUCT CONTAIN CHEMICALSKNWON TO THE STATE OF CALIFONIA TO CAUSE CANCER, BIRTH DEFECTS OR OTHER REPRODUCTIVE HARM.

WARNING & ATTENTION

WARNINGS

- It is strictly forbidden to perform wiring work after the machine is connected to electricity
- A leakage protection device must be used for the input power supply.
- Use the national standard six-square three-core cable for wiring, and check whether the insulation of the cable is in good condition
- Before proceeding with the wiring process, make sure the output voltage matches the voltage of the machine.
- The main matching power supply of the standard model is single-phase 220V, and the wiring of the machine is required to be one live wire, one neutral wire, and one ground wire. Wire according to the indication of the power supply connected to the machine.

ATTENTION

- Avoid splashing water on the engine and control box during machine cleaning
- Avoid splashing water on the motor or control box during grinding process
- If the machine does not appear to be operating properly, it should be shut down
- During operation, keep space between the cable and the grinder
- Ensure that the tools are installed in place and securely

2. MAINTENANCE & REPAIR

Before carrying out the maintenance of the DX22-E make sure you understand the contents of this manual.
Please contact DiamaPro Systems® for further explanations and information.

• **The user shall be required to comply with the qualifications of the relevant personnel:**

OPERATOR / ORDINARY MAINTENANCE TECHNICIAN: carries out the tasks necessary for the basic functioning of the machine: execution of the work cycle, implementation of operator commands, other operations closely linked to normal production, any cleaning and inspection operation performed on a daily basis, enforcement of ordinary maintenance operations. Works only with enabled safety functions.

MAINTENANCE TECHNICIAN SPECIALIST (AUTHORIZED DEALER)
Involved in all operating conditions and at all protection levels. Makes extraordinary operations that cannot be run by the user

Maintenance technicians must possess the skills required by this manual, as well as the mental and physical requirements necessary and sufficient to maintain and operate the machine. To ensure the functionality and durability of the machine daily maintenance must be performed, carrying out operations in compliance with the safety requirements.

Only the authorized dealer can make adjustments and operations that are not assigned to the operator. It is forbidden to make adjustments and interventions during machine operation. Before performing any maintenance operation disconnect the machine from the power sources and wait for the cooling of the hot parts (Motor, tool plates, etc.)

Before performing maintenance:
- Thoroughly clean the DX22-E. If in doubt about how to perform occasional repairs, contact our Technical Support or an authorized dealer.
- Upon finishing the job perform a thorough cleaning from processing residues.

2.1 SCHEDULED MAINTENANCE

Good maintenance requires constant and methodical control of all parts of the machine and adaptation of tests to its actual usage. Periodic inspections are crucial to keep the machine efficient and reduce repairs and any resulting dangers.

We recommend that you have your DX22-E serviced by an authorized dealer or a DiamaPro Systems® technician every 500 hours.
Note: frequency is taken over considering a working day of 8 hours.

2.2 ROUTINE & ADDITIONAL MAINTENANCE

Replacement of the motor belt
If, as a result of a visual inspection, it appears that the belts are worn or cracked, replace them, operating as follow:

- Disconnect power source
- Allow motor to cool before replacing belts
- Loosen bolts around water tank & remove water tank
- Loosen bolts on motor mount plate
- Loosen belt tension screw to relieve tension to remove belt
- Remove belt from large gearbox pulley and under the smaller motor pulley
- Install new belt starting with the smaller motor pulley then over the larger gearbox pulley
- Set tension back with tension bolt
- Tighten motor mount plate
- Reinstall water tank and water tank bolts

FREQUENCY	PROCEDURES
FIRST 8 HOURS (BREAK IN PERIOD)	-INSPECT MOTOR BELT -TILT MACHINE BACK & INSPECT GEARBOX SEALS AROUND EACH GRINDING HEAD
EVERY 100 HOURS	-INSPECT MOTOR BELT TENSION
EVERY 250 HOURS	-INSPECT RUBBER IN FLEXIBLE TOOL PLATE MOUNT FOR DAMAGE OR EXCESSIVE WEAR. REPLACE AS NEEDED.
EVERY 500 HOURS	-INSPECT MOTOR BELT & REPLACE IF NEEDED
EVERY 1000 HOURS	-REPLACE GEAR OIL

2. MAINTENANCE & REPAIR (cont).

NAME OF OPERATION	FREQUENCY	PERSON IN CHARGE	OPERATING INSTRUCTIONS	STATE OF MACHINE
MECHANICAL PARTS				
General Cleaning	At each start		Wash the dirty parts with a brush and water. Lubricate the parts exposed to dust; Do not lubricate the rubber parts subjected to motion (belts, etc).	Machine stopped /Power sources disconnected
Grinding Heads	At each start		Lift the gearbox grinding head, check whether the abrasive positioning pins are loose or damaged, and replace them if necessary	Machine stopped /Power sources disconnected
Wheels & Wheel Bearings	At each start		Inspect wheels & wheel bearings for damage or excessive wear. Replace if needed.	Machine stopped /Power sources disconnected
Dust Control System	At each start		Inspect dust skirt and dust hoses for damage or excessive wear. Replace if needed.	Machine stopped /Power sources disconnected

NAME OF OPERATION	FREQUENCY	PERSON IN CHARGE	OPERATING INSTRUCTIONS	STATE OF MACHINE
MECHANICAL PARTS				
Gearbox	Weekly Or every 40 hours		The gearboxes are sealed upon assembly; if you notice oil leaks, carefully find out their origin because there may be leaks from other sources. If the leaks come from the gearbox, contact our technical service or a qualified technician. Clean any oil leaks at the bottom of the grinder. For a possible change of the lubricant due to leaks or for the topping up operations, use the following type of lubricant: MOBIL SCH 630 **CAUTION** **DO NOT REPLACE THE GEARBOX. CONTACT DIAMAPRO SYSTEMS OR THE AUTHORIZED DEALER.**	Machine stopped /Power sources disconnected
Motor Belt	Weekly Or every 40 hours		Check belt for proper tension or abnormal wear. Replace if needed	Machine stopped /Power sources disconnected
SAFETY SYSTEMS				
Safety Systems	Daily		Please note the requirement to perform the checking and recording of verifications of safety components every 6 months.	Machine Stopped
Integrity of Pictograms	Weekly Or every 40 hours			Machine stopped /Power sources disconnected

SPECIFICATIONS

DX22-E	ELECTRIC
VOLTAGE	SINGLE PHASE 220V
MOTOR	5.5 HP
INVERTER	7.5 HP
CURRENT	10~15 A
WATER TANK CAPACITY	18 L
WEIGHT	465 LBS
DIMENSIONS (LxWxH)	35x22x42.5 IN
GRINDING PLATE SPEED	0-560 RPM

GENERAL PARTS

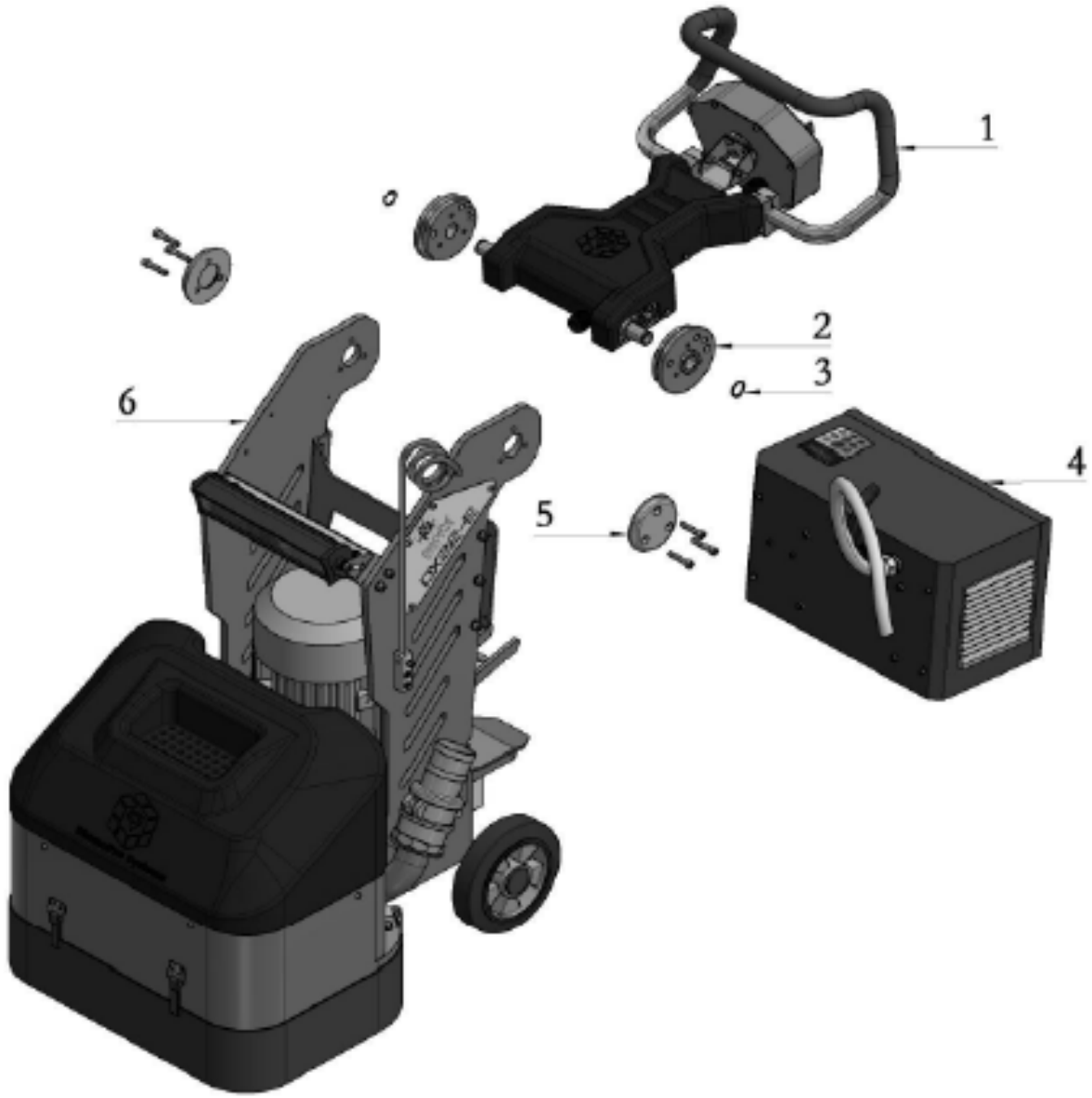

ITEM #	DESCRIPTION	PART #	QTY
1	HANDLE ASSEMBLY	DP-DX22-HASS	1
2	HANDLE GEAR BASE-BILATERAL SYMMETRY	DP-DX22-HGBS	2
3	AXLE CARD 25	DP-DX22-AC25	2
4	ELECTRIC BOX ASSEMBLY	DP-DX22-EBAS	1
5	HANDLE SPLINT	DP-DX22-HANS	1
6	BODY ASSEMBLY	DP-DX22-BODY	1

HANDLE ASSEMBLY

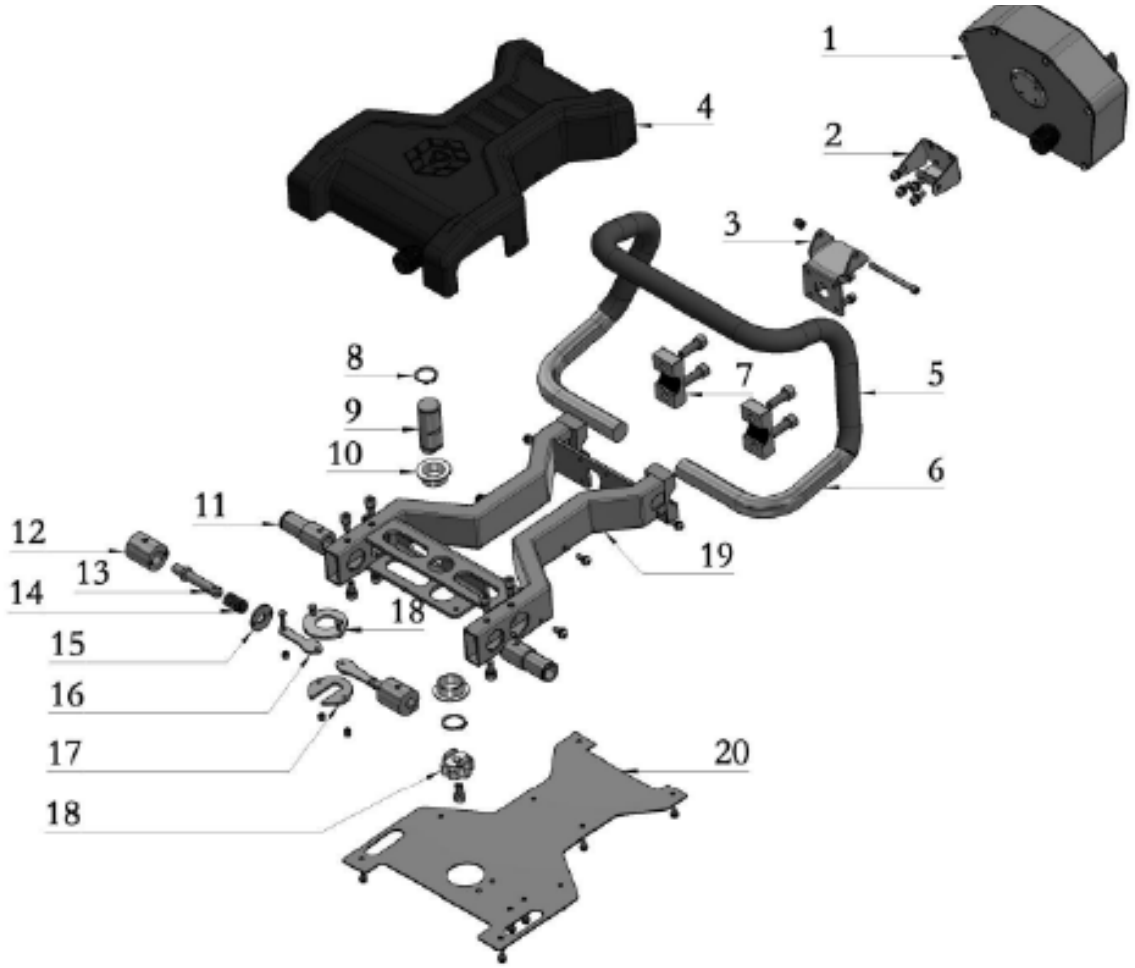

ITEM #	DESCRIPTION	PART #	QTY
1	OPERATION CONTROL BOX	DP-DX22-OPCB	1
2	CONTROL BOX BASE-UPPER	DP-DX22-UPCB	1
3	CONTROL BOX BASE-BOTTOM	DP-DX22-BMCB	1
4	HANDLE HOUSING	DP-DX22-HANH	1
5	OPERATING HANDLE SLEEVE	DP-DX22-HASL	1
6	OPERATION HANDLE	DP-DX22-OPHD	1
7	HANDLE PLATEN	DP-DX22-HDPL	2
8	AXLE CARD 25	DP-DX22-AC25	2
9	ROTATION AXLE	DP-DX22-ROAX	1
10	GUIDE SLEEVE	DP-DX22-GDSV	2
11	CONNECTING SLEEVE	DP-DX22-CNSV	2
12	FIXED PIN SLEEVE	DP-DX22-FPSV	2
13	FIXED PIN	DP-DX22-FXPN	2
14	HANDLE SPRING	DP-DX22-HSPG	2
15	FIXED PIN COVER	DP-DX22-FPCV	2
16	CONNECTOR FIXING STOPPER 1	DP-DX22-CFS1	2
17	CONNECTOR FIXING STOPPER 2	DP-DX22-CFS2	1
18	ROTARY WRENCH	DP-DX22-ROWC	1
19	OPERATING HANDLE FRAME	DP-DX22-OPHF	1
20	HOUSING BOTTOM PLATE	DP-DX22-HBPL	1

CARRIAGE

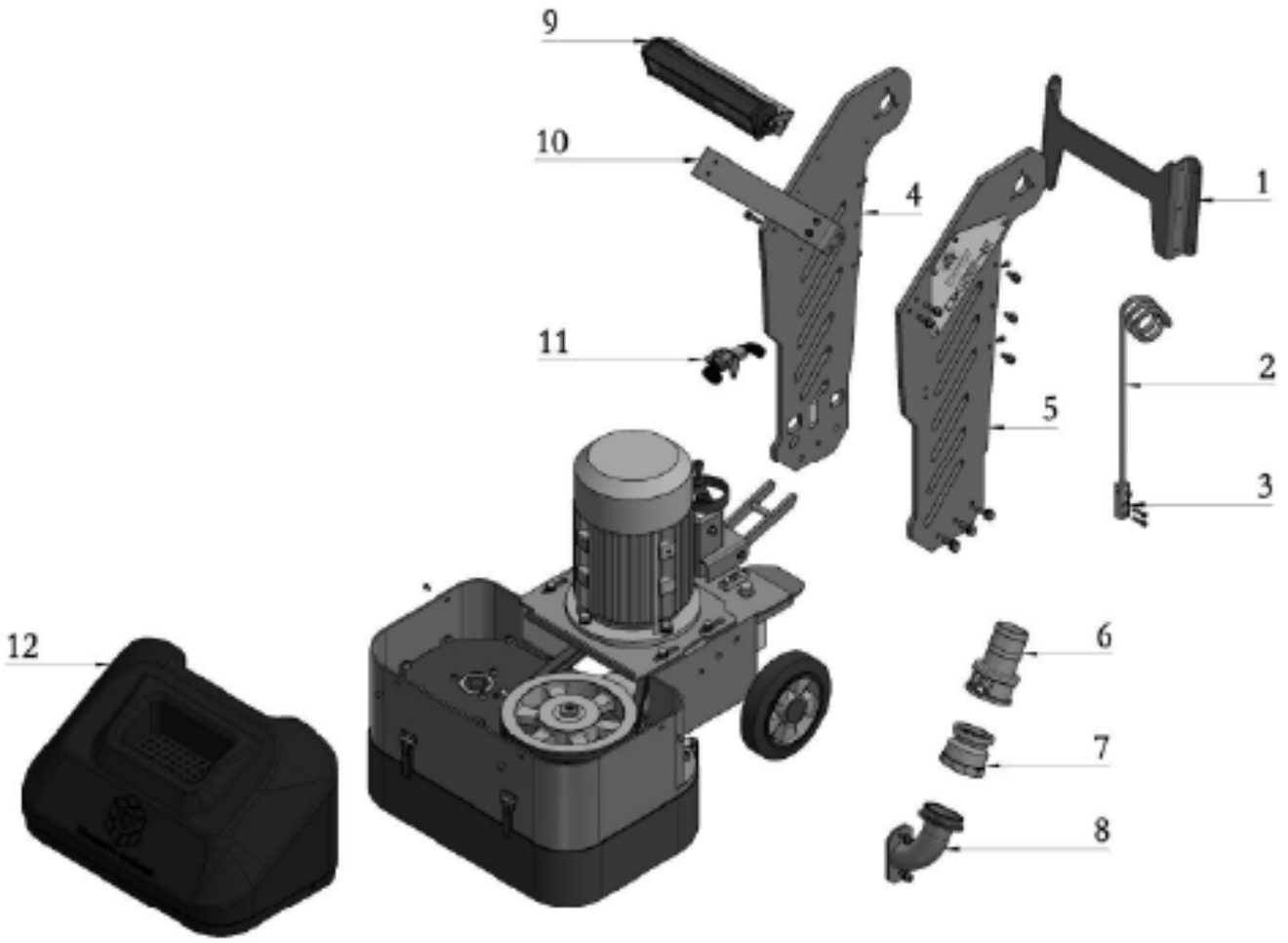

ITEM #	DESCRIPTION	PART #	QTY
1	ELECTRIC BOX BRACKET	DP-DX22-EBBR	1
2	WIRE ROD	DP-DX22-WORD	1
3	WIRE ROD BASE	DP-DX22-WBSE	1
4	RACK RIGHT SIDE PANEL	DP-DX22-RRSP	1
5	RACK LEFT SIDE PANEL	DP-DX22-RLSP	1
6	CAM LOCK -A- 2.5IN	DP-DX22-CAMA	1
7	CAM LOCK -B- 2.5IN	DP-DX22-CAMB	1
8	DUST SUCTION PORT	DP-DX22-DUSP	1
9	LED LIGHT	DP-DX22-LEDL	1
10	REINFORCEMENT PLATE	DP-DX22-RFPT	1
11	VALVE SWITCH	DP-DX22-VLSW	1
12	WATER TANK	DP-DX22-WATK	1

ELECTRICAL BOX / INVERTER

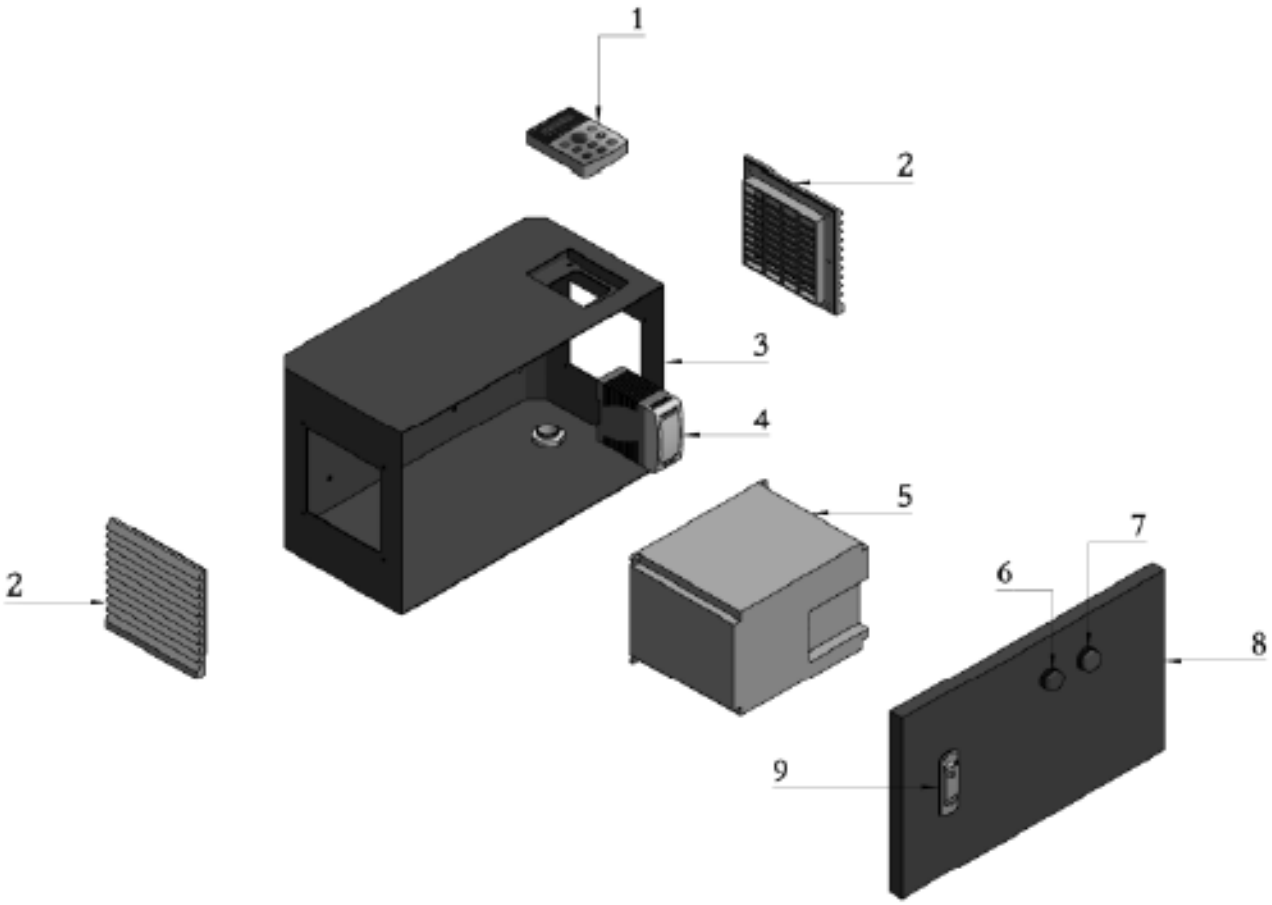

ITEM #	DESCRIPTION	PART #	QTY
1	INVERTER CONTROL PANEL	DP-DX22-IVCP	1
2	VENTILATION FILTER	DP-DX22-VFTR	1
3	ELECTRIC BOX	DP-DX22-ETCB	2
4	SWITCHING POWER	DP-DX22-PWSC	1
5	INVERTER	DP-DX22-INVT	1
6	POWER INDICATOR	DP-DX22-PWIN	1
7	WORK INDICATOR	DP-DX22-WWIN	1
8	ELECTRIC BOX DOOR	DP-DX22-EBDR	1
9	ELECTRIC BOX DOOR LOCK	DP-DX22-EBDL	1

FRAME / WHEEL ASSEMBLY

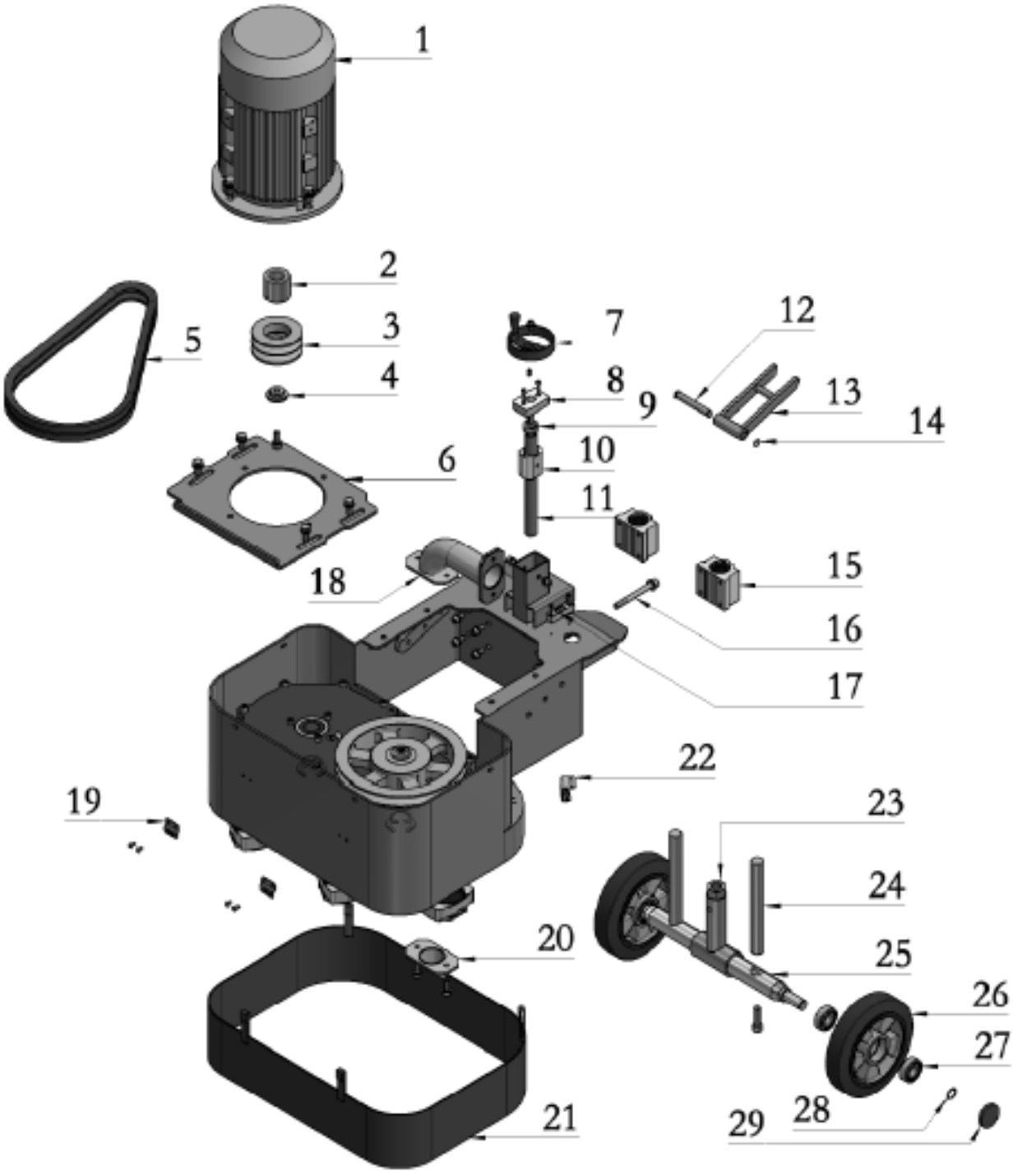

FRAME / WHEEL ASSEMBLY cont.

ITEM #	DESCRIPTION	PART #	QTY
1	MOTOR	DP-DX22-MOTR	1
2	MOTOR BUSHING	DP-DX22-MBSH	1
3	BELT PULLEY	DP-DX22-BTPY	1
4	MOTOR PLUG	DP-DX22-MRPG	1
5	BELT 1041 (TYPE 9)	DP-BELT-10419	2
6	MOTOR FLANGE	DP-DX22-MRFL	1
7	LIFT HANDLE	DP-DX22-LTHD	1
8	LIFTING BASE	DP-DX22-LTBS-TOP	1
9	FLAT BEARING 51002	DP-DX22-BEAR-51002-FLAT	1
10	LIFTING BASE	DP-DX22-LTBS-BM	1
11	LIFTING SCREW	DP-DX22-LTSW	1
12	STOP SHAFT	DP-DX22-SPST	1
13	STOP BRACKET	DP-DX22-STBR	1
14	AXLE CARD 12	DP-DX22-AC12	2
15	SLIDER BEARING	DP-DX22-SLBR	2
16	M10X100 BOLT	DP-DX22-M10x100	1
17	LEVEL BUBBLE	DP-DX22-LEVB	1
18	MIDDLE OF VACUUM TUBE	DP-DX22-MOVT	1
19	DUST BELT BASE-FRONT	DP-DX22-DBBF	2
20	BOTTOM END OF VACUUM TUBE	DP-DX22-BEVT	1
21	DUST COVER	DP-DX22-DTCV	1
22	DUST BELT BASE-REAR	DP-DX22-DBBR	2
23	SCREW SLEEVE	DP-DX22-SCRS	1
24	SLIDING SHAFT	DP-DX22-SLSF	2
25	WHEEL AXLE	DP-DX22-WHAX	1
26	WALKING WHEEL 200	DP-DX22-WKWH	2
27	BEARING 5204	DP-BEAR-6204	4
28	AXLE CARD 20	DP-DX22-AC20	2
29	WALKING WHEEL PLUG	DP-DX22-WWPG	2

DRIVE ASSEMBLY

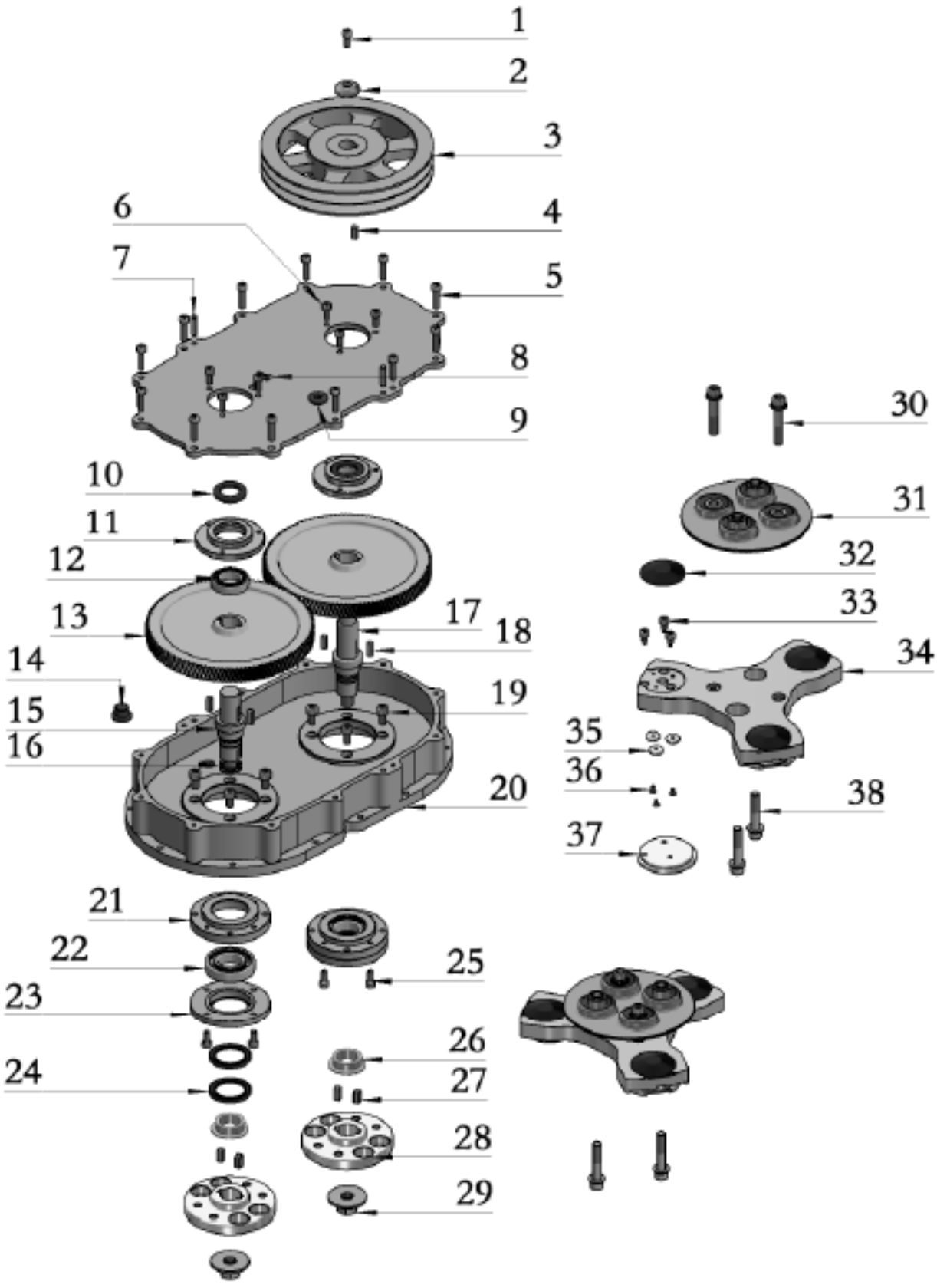

DRIVE ASSEMBLY cont.

ITEM #	DESCRIPTION	PART #	QTY
1	HEXAGON SOCKET BOLT M8*20	DP-M8X20	1
2	BELT PULLEY PLUG	DP-DX22-BTPP	1
3	BELT PULLEY 250	DP-DX22-BTPY-250	1
4	8x7x22 PIN	DP-PIN-8X7X22	1
5	HEXAGON SOCKET HEAD M8x35	DP-HSH-M8X35	12
6	HEXAGON SOCKET HEAD M8x20	DP-HSH-M8X20	6
7	M8x35 DOWEL PIN	DP-PIND-M8X35-	2
8	WATER PIPE CLAMP	DP-DX22-WPCL	1
9	FILLING PLUG	DP-DX22-OPLG	1
10	OIL SEAL 30x47x7	DP-OSEAL-30X47X7	2
11	6006 BEARING BASE	DP-BEAR-6006-BASE	2
12	6006 BEARING	DP-BEAR-6006-	2
13	Z112 HELICAL TEETH-1 LEFT 1 RIGHT	DP-DX22-Z112-HT	2
14	OIL DRAINING PLUG	DP-DX22-ODPG	1
15	SECONDARY DRIVE SHAFT	DP-DX22-2SDS	1
16	O-RING	DP-DX22-ORNG	4
17	MAIN DRIVE SHAFT	DP-DX22-MDRS	1
18	8x7x25 PIN	DP-DX22-8X7X25	4
19	HEXAGON SOCKET BOLT M10*20	DP-DX22-M10X20	6
20	GEAR BOX	DP-DX22-GBOX	1
21	6207 LOWER BEARING BASE	DP-BEAR-6207-BASE	2
22	6207 BEARING	DP-BEAR-6207	2
23	6207 LOWER BASE COVER	DP-BEAR-6207-COVER	2
24	42x60x6 OIL SEAL	DP-OSEAL-42X60X6	4
25	HEXAGON SOCKET BOLTS M8x25	DP-HSB-M8X25	6
26	DX22 SEALED STEEL SLEEVE	DP-DX22-SSSV	2
27	8x7x20 PIN	DP-PIN-8X7X20	4
28	DX22 GRINDING CLAW BASE	DP-DX22-GRCB	2
29	NUT M18	DP-NUT-M18	2
30	HEXAGON SOCKET BOLT M12x70	DP-DX22-HSB-M12X70	2
31	FLEX COUPLER DX22/DX26	DP-FLEX-COUPLER	2
32	GRINDING PLATE BOLT PLUG	DP-DX22-GPBP	2
33	VELCRO PAD POSITIONING PIN	DP-DX22-VPPP	18
34	GRINDING PLATE	DP-DX22-GRPL	2
35	MAGNET	DP-DX22-MGNT	18
36	FLAT HEAD BOLT M5x10	DP-BOLT-M5X10-FLAT	18
37	VELCRO PAD	DP-DX22-VPAD	6
38	HEXAGON SOCKET BOLT M12x70	DP-HSB-M12X70	4

CONTROLS

ITEM #	DESCRIPTION	PART #	QTY
A	VOLTAGE/CURRENT SCREEN	DP-DX22-VSCR	1
B	EMERGENCY STOP SWITCH	DP-DX22-EMSW	1
C	MOTOR FWD/REVERSE	DP-DX22-MFWR	1
D	GRINDING HEAD SPEED	DP-DX22-GHSP	1
E	LED LIGHT	DP-DX22-LLED	1
F	USB PORT	DP-DX22-USB	1

CONTROL PANEL OPERATION PROCESS

Connect the power > check whether (A) voltage/current is always on > turn clockwise to turn on (B) > knob (C) adjusts the forward and reverse direction of the grinding head > adjust the indicator of the (D) knob to control the speed of the grinding head

WIRING

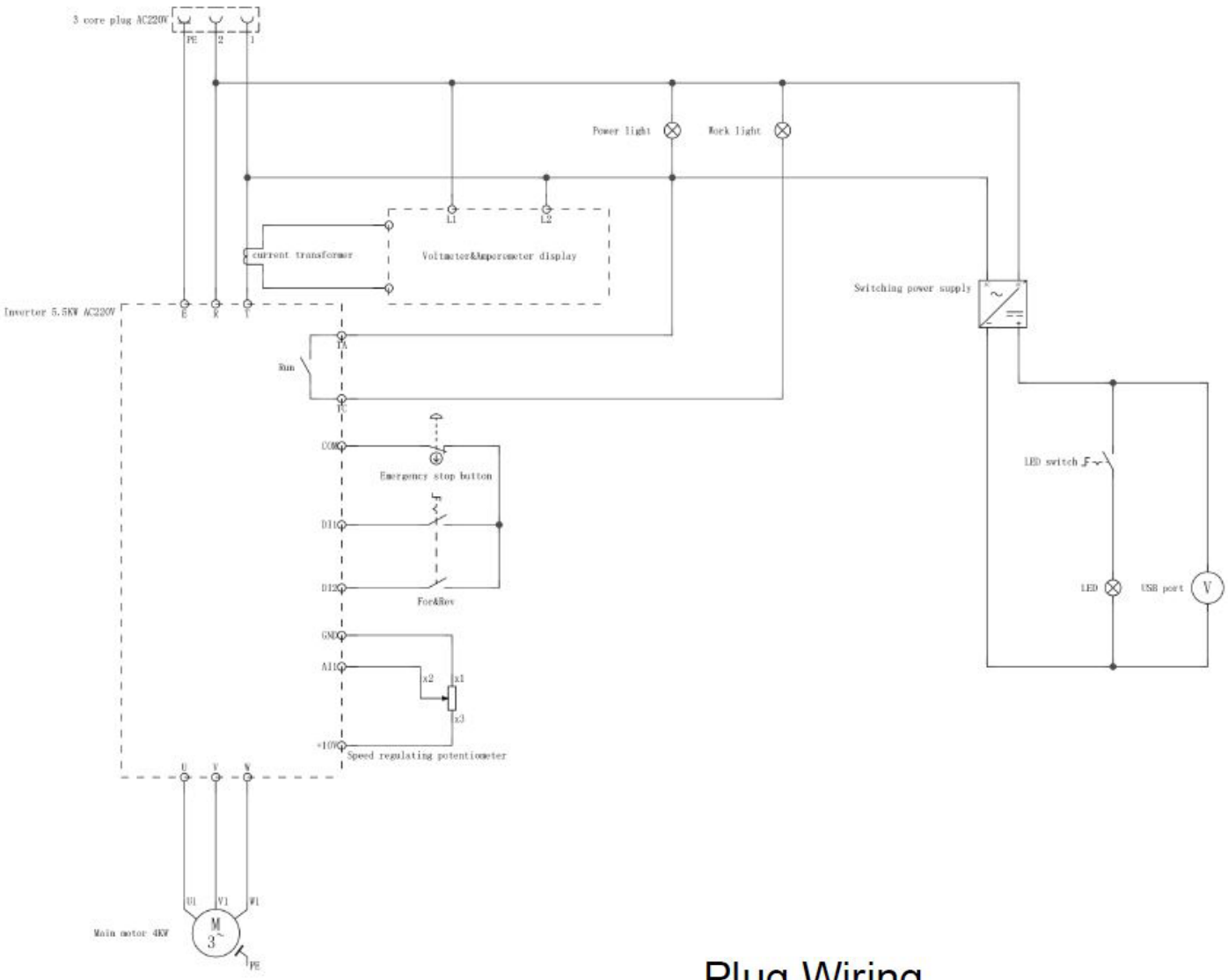

Plug Wiring

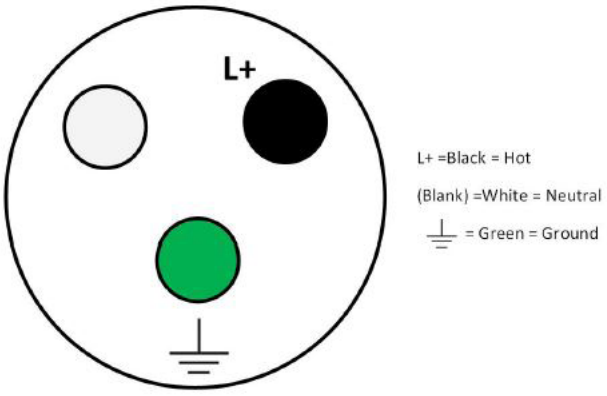

DiamaPro Systems®
3343 Peachtree Road NE
Suite 145 #24
Atlanta, GA 30326
470-977-2323