DiamaPro®
SYSTEMS

OWNER'S MANUAL

DEMON

FLOOR MACHINE

INSTRUCTION MANUAL

SAVE THESE INSTRUCTIONS FOR FUTURE REFERENCE

SERVICE INFORMATION

To obtain consistent performance over the life of your equipment, read though these instructions and save them for future reference. If you require service, contact the dealer from which the machine was purchased or an authorized service station. Always refer to your limited Warranty for complete service information.
The model, type, and serial number are indicated on the data plate on the side of the handle. From prompt and complete service, refer to these numbers when inquiring about service.

SERIAL NO.	MODEL	
VOLTS	PHASE	HZ
MOTOR	AMPS	H.P.

Write the model and serial number of your unit in the space provided. Refer to the data plate on unit.

SERIAL #	MODEL #

Retain this owners manual for future reference.

SPECIFICATIONS

MODEL	DEMON JR.	DEMON
Part #	DPDMNJR17HD	DPDMN17
Machine Size	17 in	20 in
Pad Size	16 in	19 in
Pad Speed	165 RPM	165 RPM
Amp Draw	7.9	8.5

ALL SIZES

Motor	1.5 HP, 180 frame, TEFC dual capacitor AC motor
Drive System	Triple-Planetary XHD 11:1 helical cut industrial gears
Power	115-230V, 60 Hz power
Power Cord	50 2-part, 12-3 SJTOW industrial power cord
dB Rating	66 dB - Meets GS42 standard

FEATURES

- Twin (dual) capacitor 180 frame TEFC (Totally Enclosed Fan-Cooled) motor keeps out dirt and dust for longer motor life.
- Extra heavy duty spring steel cord strain relief with a 2-piece 12-3 power cord
- Low current draw
- Thumb operated safety switch
- Negative pressure on/off switch
- Dual steel operating triggers for left or right hand operation
- One-piece industrial powder coated heavy duty steel handle for optimum durability
- Welded frame for rugged, reliable performance
- 8” Non-marking, 2X8, ball bearing wheels
- Multiple position handle adjustment for operator comfort and safety
- Comfort style vinyl handle grips for ease of use

Revolutionary Design that Utilizes.....

- Floating head to insure 100% pad contact at all times
- Low Profile
- Quick handle/Carriage Removal

IMPORTANT SAFETY INSTRUCTIONS

Your Demon is equipped with a safety switch lock and power switch triggers designed for your safety. Do not attempt to bypass or defeat the safety switch lock. Never use any device to lock the power switch triggers in the “ON” position.

- Do not leave the Demon plugged in. Turn off the switch and unplug the electrical cord when not in use and before servicing or changing the brushes or pads.
- Do not allow the machine to be used as a toy. Close attention is necessary when used near children. Do not leave the machine connected to an electrical outlet unattended.
- Use only as described in this manual. Use only manufacturer’s recommended attachments.
- Do not use with a damaged cord or plug. If the machine is not working as it should, has been dropped, damaged, or left outdoors, return it to a service center before using.
- Use care to keep the electrical supply cord around sharp edges or corners. Keep the cord away from the heated surfaces.
- Connect to properly grounded (3-wire) outlet only. Refer to Grounding Instructions.
- Do not use extension cords or outlets with inadequate current carrying capacity.
- Turn off all controls before unplugging.

ELECTRIC SHOCK CAN CAUSE SERIOUS INJURY OR BE FATAL. PLEASE READ THE FOLLOWING INSTRUCTIONS ON THE USE AND OPERATIONS OF FLOOR FINISHING MACHINES.

- Do not unplug by pulling on the cord. To unplug, grasp the plug and pull.
- Do not handle the plug or Demon with wet hands.
- Wind the cord no tighter than is necessary to retain it during storage. Refer to Cord Storage.
- Use extra care when working on or near stairs.
- Do not use in conjunction with flammable or combustible liquids such as gasoline, or use in areas where explosive vapor or dust may be present.
- Store your Demon indoors in a cool, dry area.
- Keep your work area well lighted.
- WARNING: To avoid electrical shock, use indoor only.

RISK OF EXPLOSION. FLOOR SANDING MACHINE CAN RESULT IN AN EXPLOSIVE MIXTURE OF FINE DUST AND AIR. USE FLOOR SANDING MACHINE ONLY IN A WELL-VENTILATED AREA, FREE FROM ANY FLAME OR MATCH

GROUNDING INSTRUCTIONS

This appliance must be grounded. If it should malfunction or break down, grounding provides a path of least resistance for electric current to reduce the risk of electric shock. This appliance is equipped with a cord that has an equipment-grounding conductor and grounding plug. The plug must be plugged into an appropriate outlet that is properly installed and grounded in accordance with all local codes and ordinances.

FLOOR FINISHING MACHINES RATED LESS THAN 150 VOLTS

Improper connection of an equipment grounding conductor can result in risk of electric shock. Check with a qualified electrician or service person if you are in doubt as to whether the outlet is properly grounded. Do not modify the plug provided with the appliance. If it will not fit the outlet, have a proper outlet installed by a qualified electrician. This appliance is for use on a nominal 120 volt circuit and has a grounding plug that looks like the plug illustrated in Figure 1.

A temporary adapter which looks like the adapter illustrated in Figure 2 may be used to connect this plug to a two pole receptacle, as shown, if a properly grounded outlet is not available. The temporary adapter should be used only until a properly grounded outlet (Figure 1) can be installed by a qualified electrician. The green colored rigid ear, lug, or the like extending from the adapter must be connected to a permanent ground such as a properly grounded outlet box cover. Whenever the adapter is used, it must be held in place by metal screw.

FOR FLOOR FINISHING MACHINES RATED 150-220 VOLTS:

If the machine is provided with an attachment plug cap as shown in Figure 3, it is intended for use on a 240 volt (nominal) circuit. No adapter is available for this cap.

DO NOT USE GROUNDING ADAPTERS ON DEMONS IN CANADA. CHECK WITH CANADIAN CODE FOR PROPER EQUIPMENT USAGE. IMPROPER USE OF GROUND ADAPTORS CAN CAUSE SERIOUS INJURY, FIRE, OR BE FATAL.

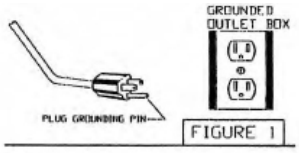

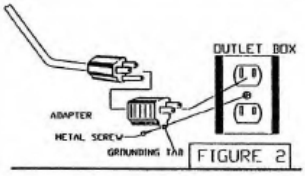

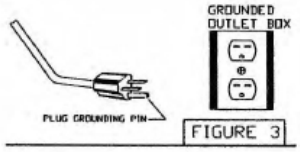

CONTROLS

TO TURN THE MACHINE ON

The operating handle must be lowered and locked to the proper operating position before switching the machine ON. Place both hands firmly on the handle grips with your fingers around the power triggers.

Do NOT apply pressure on the triggers before the safety switch lock is disengaged.

Disengage the safety switch lock by pushing it forward with one thumb. Then, while holding the safety switch lock in the disengaged position, squeeze the power triggers toward the handle grips and return your thumb to the handle grip.

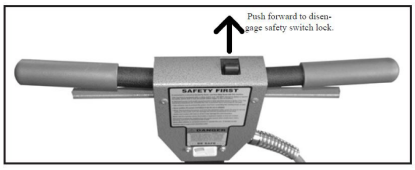

To stop the machine, simply release the triggers. The safety switch lock will automatically return to the engaged position.

GUIDELINES FOR OPERATION

Your Demon is a very sensitive, powerful unit. When in operation, it should be guided gradually and smoothly without sudden or rough motions. You will want to practice with your machine on a smooth surface until you have experience in operating it.

- For ease of operation, always keep the brush or pad surface level, balanced, and flat on the floor at all times.
- Always adjust the operating handle to a comfortable height at which the brush or pad surface is balanced before starting the machine. (See Handle Adjustment)
- Your Demon will operate differently on various surfaces. For example, there will be much more resistance when the machine is used on a rough surface, than when it is used on a smooth surface. The operator should be prepared to adjust for these differences.
- BEGIN OPERATING THE DEMON WITH THE PAD SURFACE LEVEL, BALANCED AND FLAT ON THE FLOOR.
- To move the machine to the right, slowly apply slight upward pressure on the handle.
- To move the machine to the left, slowly apply slight downward pressure on the handle.
- To move the machine forward or backward, keep the brush or pad flat on the floor and push or pull the machine in the desired direction.

ADJUSTMENTS- HANDLE ADJUSTMENT

The handle can be adjusted to any desired work position by simply pulling on the pull pin and move the handle to the desired position. Firmly push the pull pin back into the adjustment holes. This will lock the handle in position.

CORD STORAGE

When not in use, loosely coil the power cord and hang on the handle.

CLEANUP & STORAGE

After being used, your Demon can be wiped clean with a soft damp cloth and should be stored in a clean, dry place.

DEMON BY DIAMAPRO®

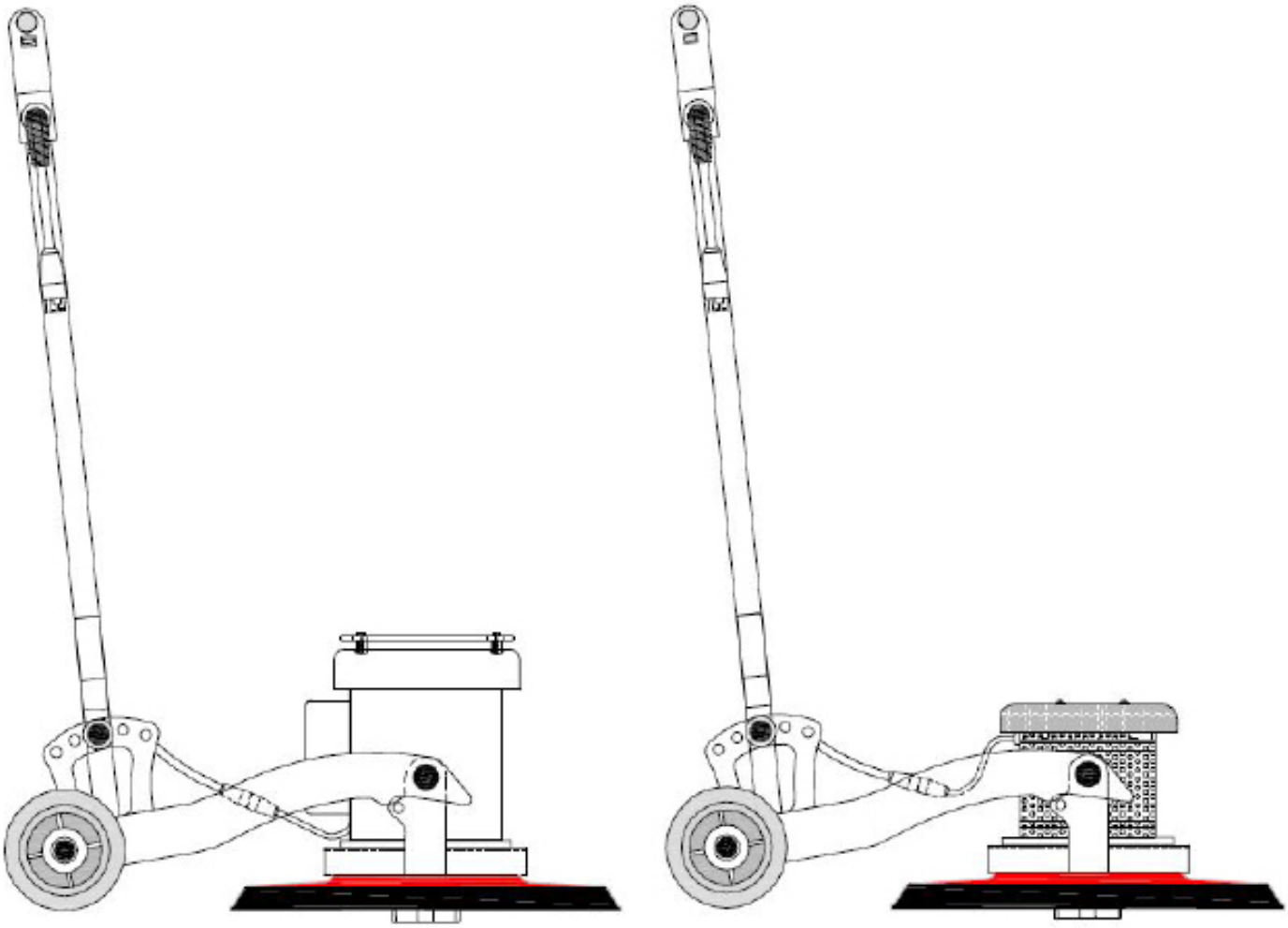

FIGURE (1)

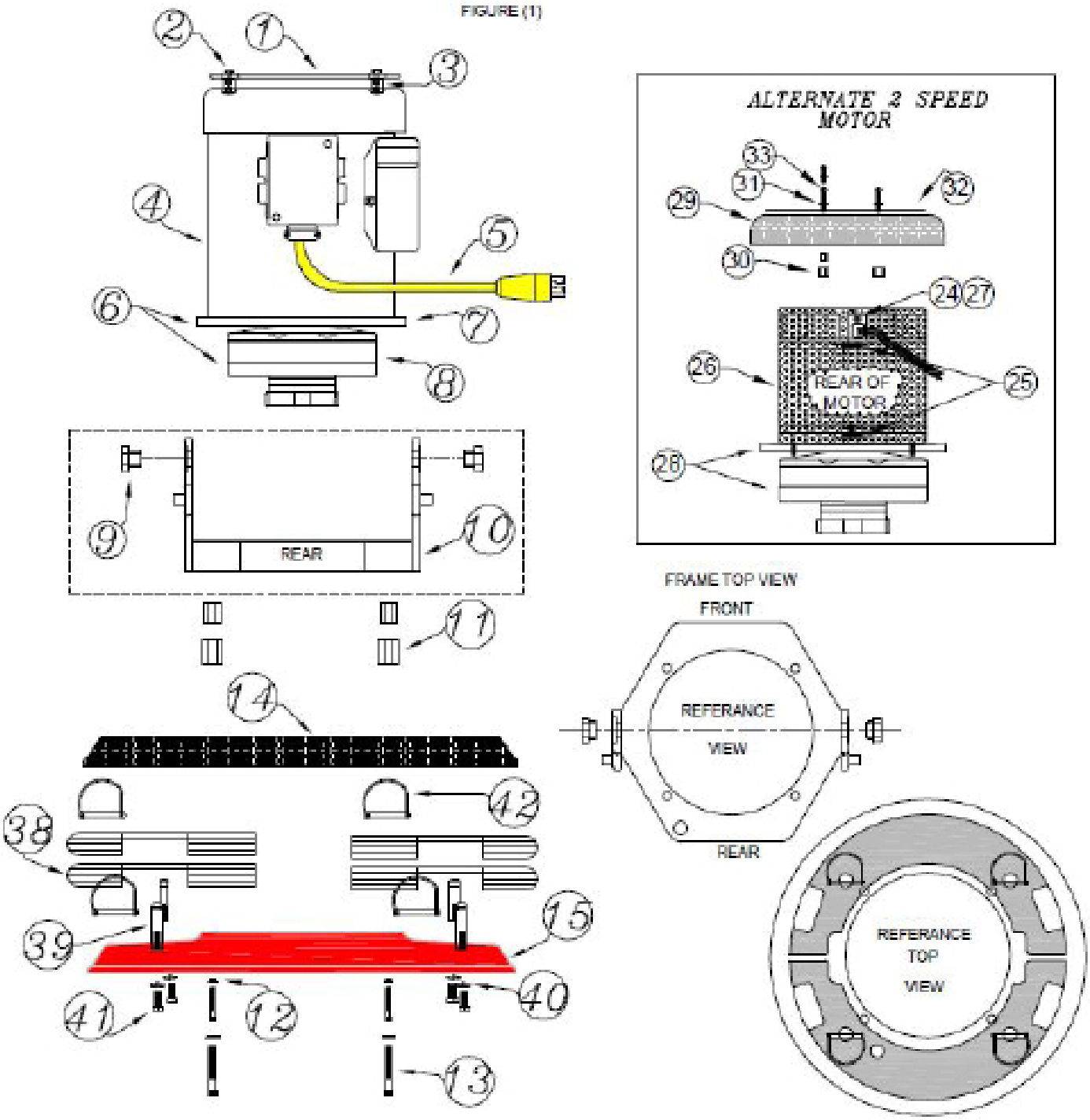
ALTERNATE 2 SPEED MOTOR
REAR OF MOTOR
REAR
FRAME TOP VIEW
FRONT
REFERANCE VIEW
REAR
REFERANCE TOP VIEW

FIGURE (2)
REAR VIEW

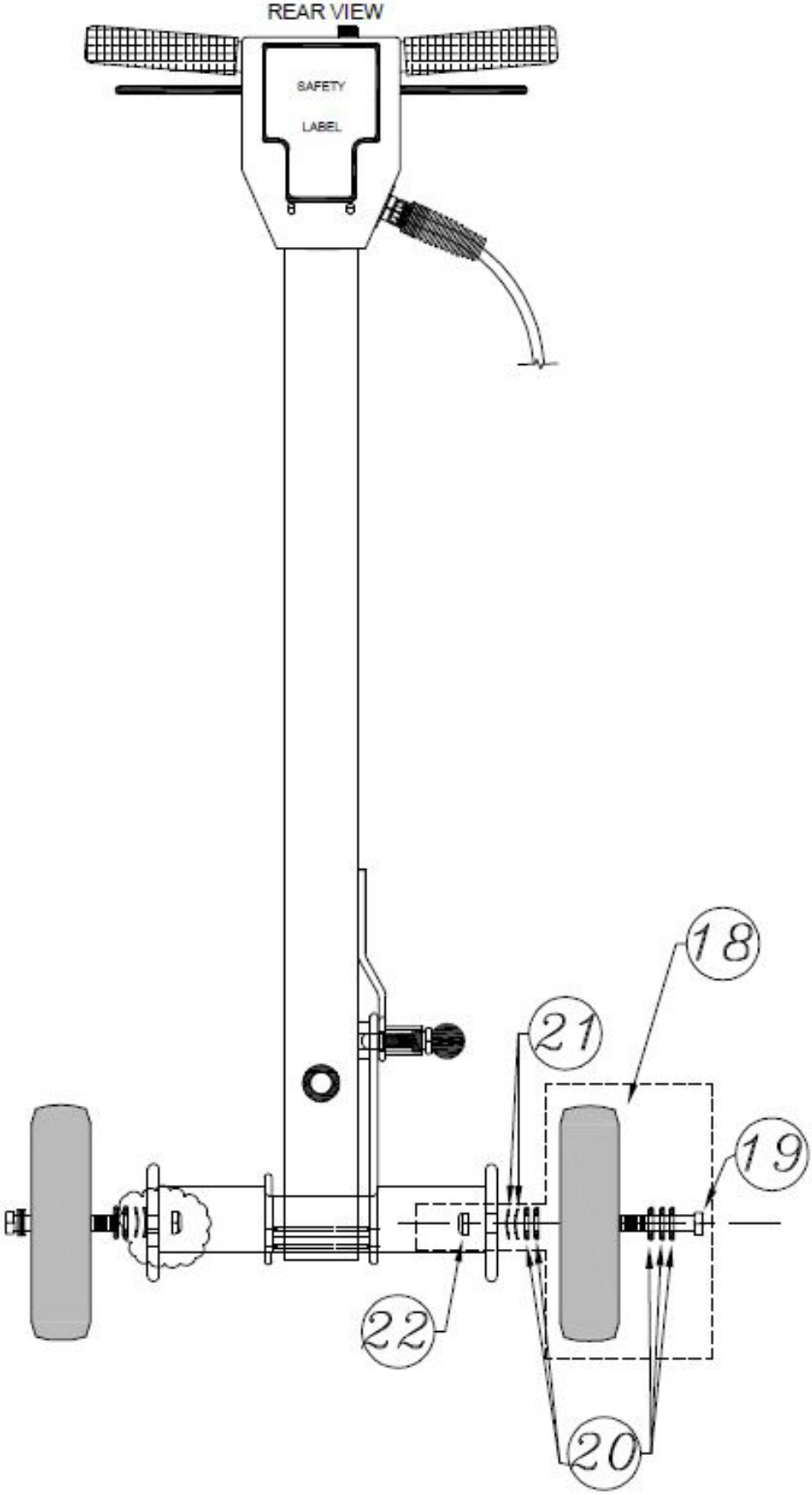

INSTALLATION SEQUENCE OF WHEELS AND HANDLE ASSEMBLY

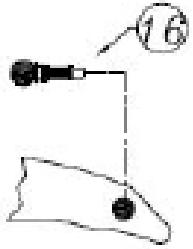

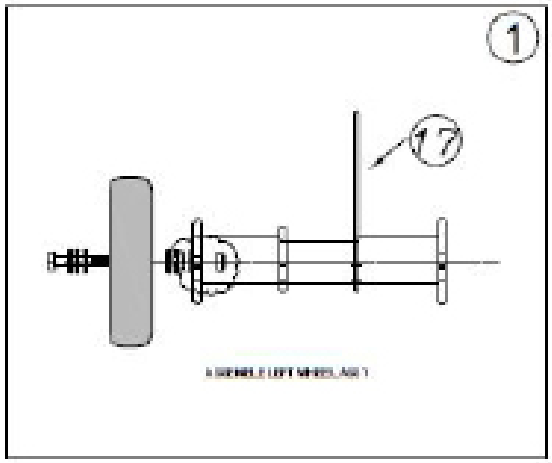

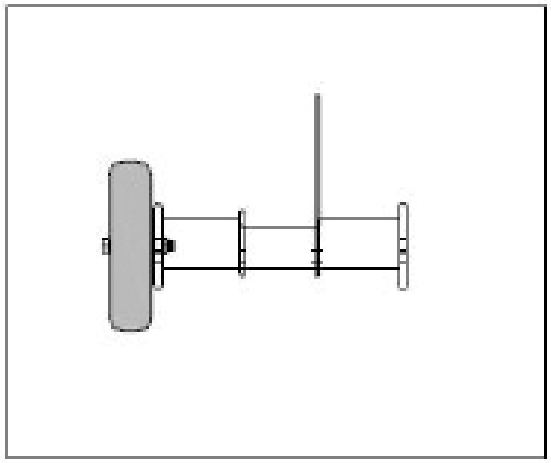

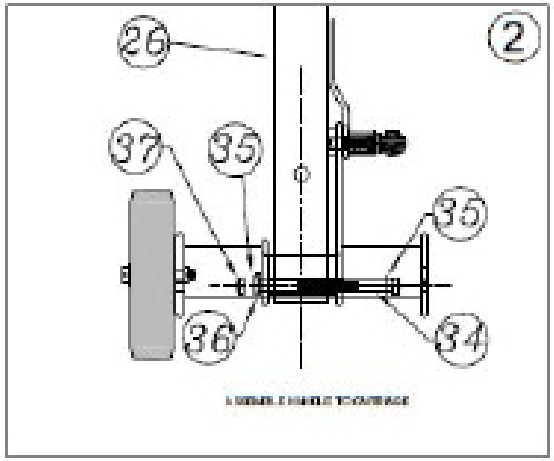

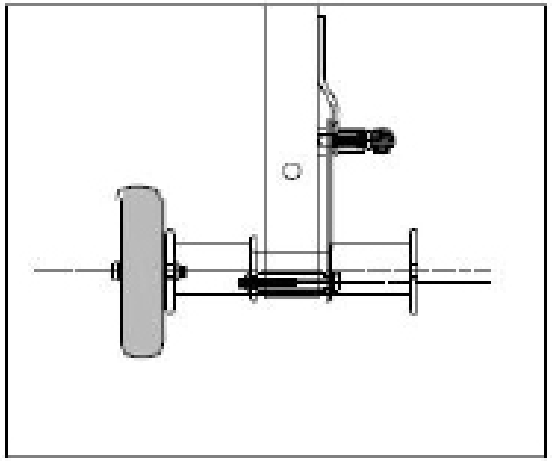

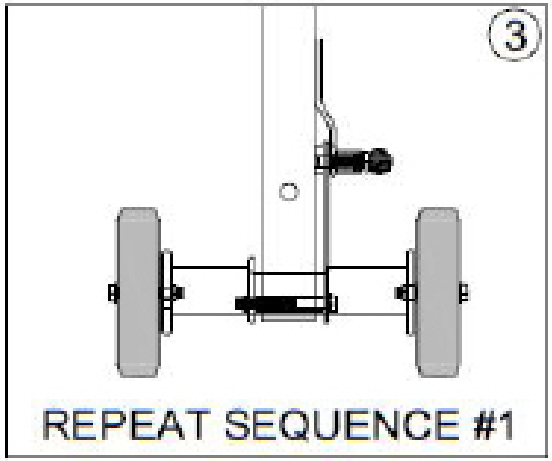

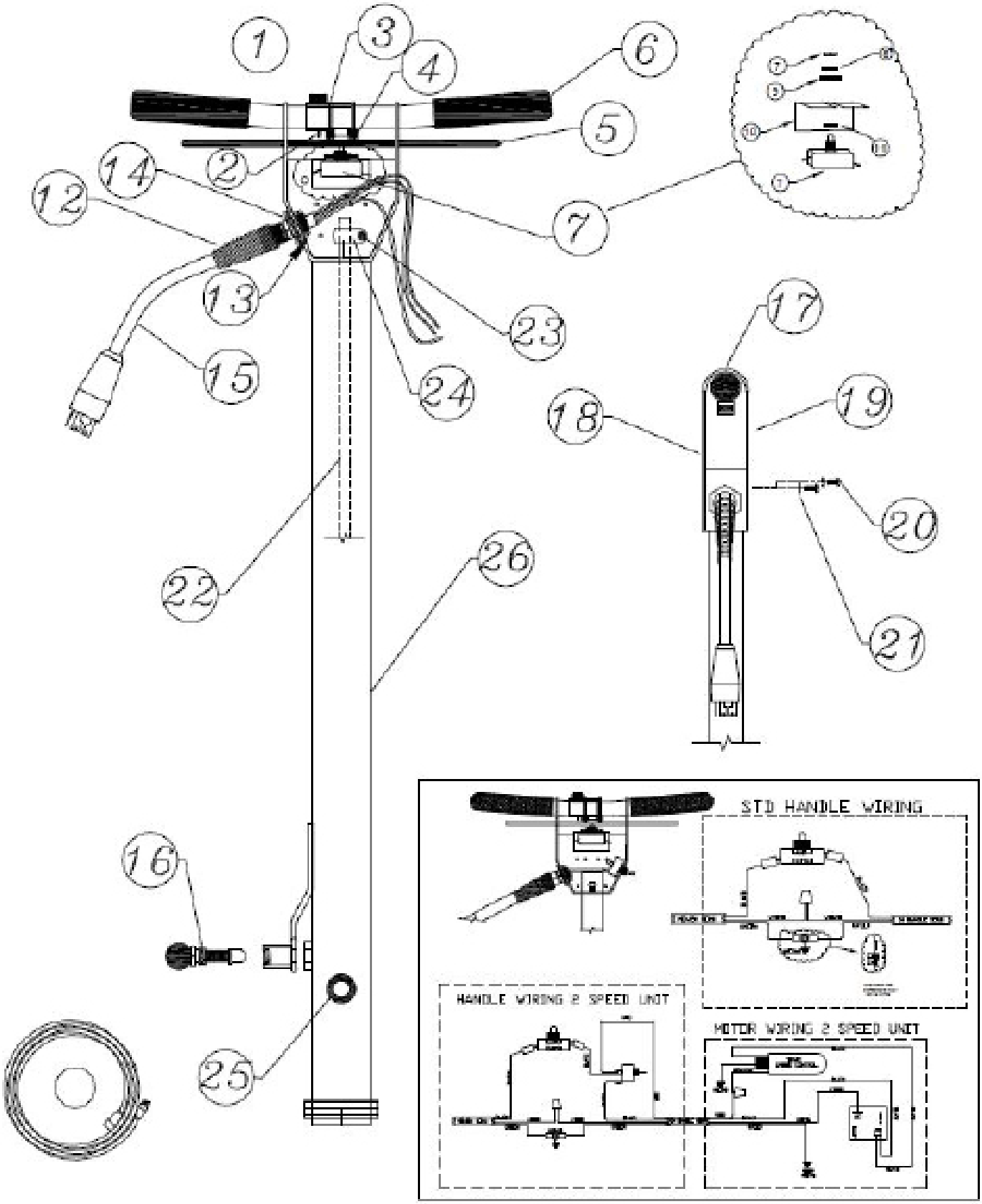
1
2
3
4
5
6
7
8
9
10
11
12
13
14
15
16
17
18
19
20
21
22
23
24
25
26
STD HANDLE WIRING
HANDLE WIRING 2 SPEED UNIT
MOTOR WIRING 2 SPEED UNIT

DiamaPro®
SYSTEMS

www.diamaprosystems.com | 470-977-2323